icotek
NORTH AMERICA

IP54 | up to NEMA TYPE 12 | HL3 EN 45545-2 | UV ISO 4892-2A | ECOLAB certified | RoHS compliant | Made in Germany

KEL-JUMBO flex

Cable Entry Grommets

IP54

Product Description

The KEL-JUMBO flex is a flexible cable entry grommet for cables without connectors with a diameter range from 27 - 68 mm.

They are ideal for the routing supply cables into the electronic enclosures.

Cutting of KEL-JUMBO flex grommets:

- Cable diameter less 25%
- The corresponding diameters are marked on the grommet

It is recommended that additional strain relief be provided for cables as part of the installation.

Advantages & Benefits

- Quick assembly
- Grommets allow dynamic and flexible movement of rigid cables
- Compact installation area (88 × 88 mm)

Specifications

Material	**Frame: Polyamide (PA)** **Pyramid: Elastomer**
Flame class	**UL94-V0**
IP rating	**IP54**
NEMA type rating	**NEMA type 12 (acc. to UL 50E)**
Temperature	**- 40°C to + 90°C (static)** **- 40°F to + 194°F (static)**
Properties	**Halogen-free, silicone-free**
Cut-out dimensions	**Round, ø-cable +20%**

Accessories

MP Module plates	148 - 149
BP Blank plates	158 - 159

Description	Type	Order No.	Clamping range	PU
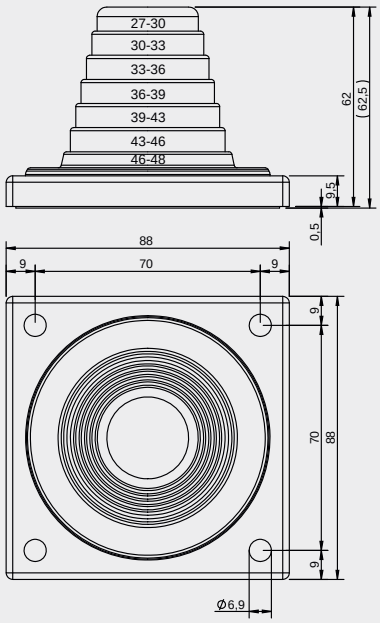	**KEL-JUMBO flex 27-48**	**42614**	**27 - 48 mm**	**1**
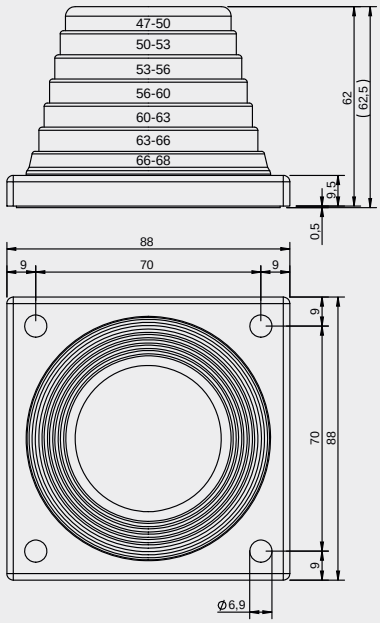	**KEL-JUMBO flex 47-68**	**42616**	**47 - 68 mm**	**1**